Società Italiana Tecnospazzole

Product Sheet
from SitBrush.com
2021-01-17

Crimped Wire Brushes TE80, TE100, TE120, TE150 for Grinders

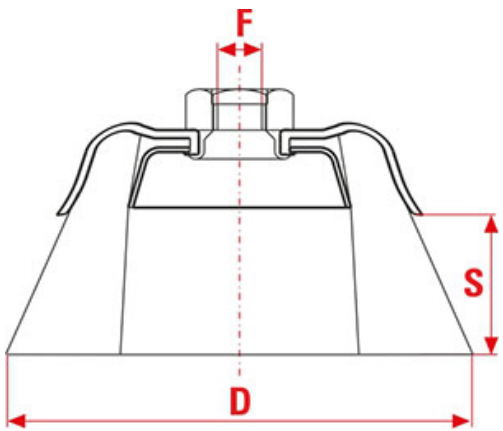

Professional

Brushes with crimped brass-plated wire for cleaning metallic surfaces, wood, rubber, stones and marble.
The TE version includes lighter and less expensive cup brushes.

Applications: With lower wire density they are suitable for lighter jobs of cleaning, satin finishing, finishing, waste removal

D	ART	F	S	Ø mm	WIRE	MAX RPM	Box	REF

D	ART	F	S	Ø mm	WIRE	MAX RPM	Box	REF
80	TE 80	M14	25	0,3	Brass Coated Steel	14000	10	105
100	TE 100	M14	25	0,3	Brass Coated Steel	8500	6	108
100	TE 100	22,2	25	0,3	Brass Coated Steel	8500	6	109
120	TE 120	M14	30	0,3	Brass Coated Steel	6600	4	118
120	TE 120	22,2	30	0,3	Brass Coated Steel	6600	4	119
150	TE 150	M14	24	0,3	Brass Coated Steel	6600	3	121
150	TE 150	22,2	24	0,3	Brass Coated Steel	6600	3	122

Società Italiana Tecnospazzole
Via Porrettana 453
Casalecchio di Reno
40033 Bologna, Italy.
+39 051 6113211
info@sitbrush.com